PPC-SH156-4000

Industrial 15.6” LCD Fanless Panel PC with Intel 4th Generation Processor, 4 USB Ports/ 6 COM Ports/ HDMI / Dual Gigabit LAN

FEATURES

- Intel® 4th Generation processor with graphics built in.
- Max memory: DDR3 up to 8GB
- Dual Gigabit Ethernet Ports
- Intel® Integrated HD Graphics Technology
- Realtek® ALC662 High-Definition Audio chip on-board
- Multi I/O: 3x USB 2.0 & 1 x USB3.0, 6x COM ports
- Bay: 1x 2.5” HDD (Internal) Bays
- Input Power: 12V DC
- Front Bezel Protection: IP65
- Supported OS: Windows® 7/8/10, Linux, Ubuntu, Debian

Introduction

PPC-SH156-4000 Industrial Panel PC supporting Intel 4th Generation Processor with Built in Graphics. PPC-SH156-4000 comes with 15.6” LCD Display. PPC-SH156-4000 supports One 2.5” HDD/SSD, 2x Com Port, 2 x USB 3.0 & 2 USB 2.0 Ports and one Mini PCIe expansion slot.

PPC-SH156-4000 is ideal for developing high-performance systems for industrial control and Automation, retail, gaming, print imaging and digital signage.

Specification

LCD	
Model	PPC-SH156-4000
Resolution	1920 x 1080 (FHD)
Brightness	400 cd/m²
Contrast Ratio	1000:1
Viewing Angle	170/170
Backlight	LED
Backlight MTBF	35000Hrs
Touch Screen	
Touchscreen Type	Project Capacitive Touch (10 points)
Touchscreen Interface	USB
Touch response time	2ms
Luminousness	90%
Surface Hardness	7H
MTBF	>50 million times
System	
Processor	• Intel® Core, I7-4500U, dual core, 1.8GHz, fanless • Intel® Core, I5-4200U, dual core, 1.6GHz, fanless
BIOS	• AMI
System Memory	• Max. 8GB
Chipset	• -
Video	• Integrated graphics HD Graphics • One HDMI
Ethernet	• Dual Realtek RTL 8111E Gigabit Ethernet controller • One Wifi Module (Optional)
On Board I/O	• 3× USB 2.0 Ports • 1× USB 3.0 Ports • 6 x COM RS232 Ports (COM1~COM 2 RS-232/422/485 & COM3~COM6 3 Wire RS-232)
Watchdog Timer	• Programmable watchdog timer for 1~255 seconds.
CMOS	• On-board RTC with 242 bytes of Battery-back CMOS RAM.
Audio	• Realtek ALC662, High Definition Audio (HD) • Support Line-OUT, MIC
Power	• Support both AT and ATX mode.
Cooling	• One CPU cooling FAN connector nearby CPU socket • One system cooling FAN connectors for chassis or power supply cooling.
Power Requirement	
External Power	AC 100~240V
Power Input	9V ~36V DC
Power Consumption	~40W
Mechanical & Environment	
Drive Bay	• One 2.5” Hard Disk Bay
Dimension	• 398.8(W) x 248.2(H) x 55(D) mm
Weight	• Gross 6.6kg, NW 5Kg
Operation temperature	• -20 to 60°C
Storage temperature	• -30 to 70°C
Relative humidity	• 5% to 95% (Non-Condensing)
Vibration	• 5-500 Hz, 0.026 G²/Hz, 2.16 Grms, X, Y, Z, 1 hour per axis
Additional Chassis FAN	• N/A
Front Bezel protection	• IP65 Compliant

Ordering Information	
PPC-SH156-4500-C109	Industrial 15.6” LCD Fanless Panel PC with Intel 4th Generation i7-4500U Processor, 4 USB Ports/ 6 COM Ports/ HDMI / Dual Gigabit LAN
PPC-SH156-4200-C109	Industrial 15.6” LCD Fanless Panel PC with Intel 4th Generation i5-4200U Processor, 4 USB Ports/ 6 COM Ports/ HDMI / Dual Gigabit LAN

Dimension

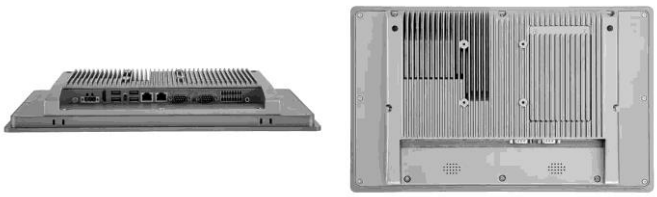

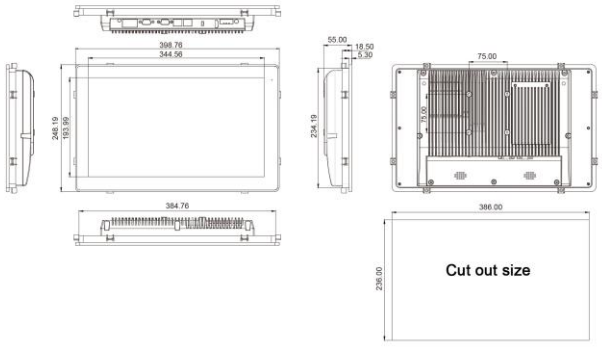

Rev: 1.0 20201201